PUBLIC ADDRESS / ATTENUATORS / LOW IMPEDANCE

DOT-60M

LOW IMPEDANCE MONO ATTENUATOR









- For 100 V line installations
- For universal standard case
- 10 position ergonomic potentiometer with switch off
- Minimalist aesthetic

+ Info:
https://fonestar.com/DOT-60M

ESPECIALLY RECOMMENDED IN:


Hospitality


Offices


Hotels


All sectors

DESCRIPTION

Low impedance mono attenuator. Flush or surface mounting.

TECHNICAL CHARACTERISTICS

FEATURES	Low impedance mono transformer attenuator for recessed or surface mounting. The transformer provides better sound quality and volume control accuracy.
POWER	60 W maximum
OUTPUTS	Low Z for 4-8 Ohm speakers
CONTROLS	10 dimming and off positions
DIMENSIONS	Total: 83 x 83 x 50 mm depth Insert: 50 x 50 x 38 mm depth
WEIGHT	0.2 kg
	For standard universal square box, round for plasterboard partitions and for surface installation box mod. DOT-BOX. Distance between screws: 60 mm


+ Info:
https://fonestar.com/DOT-60M

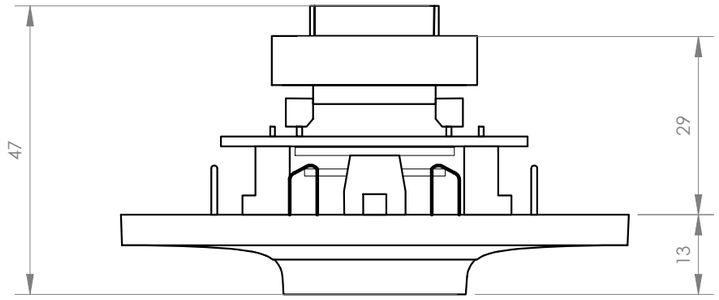

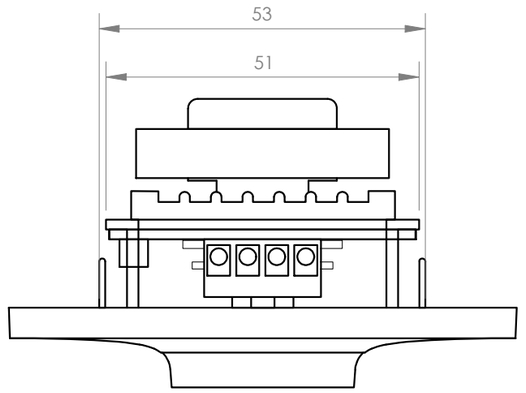

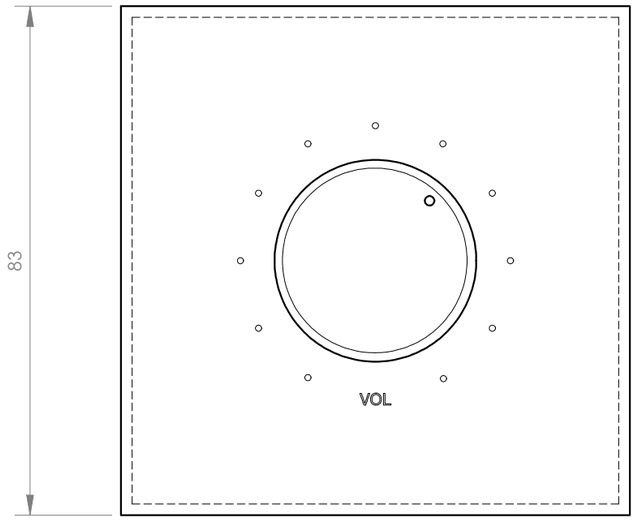

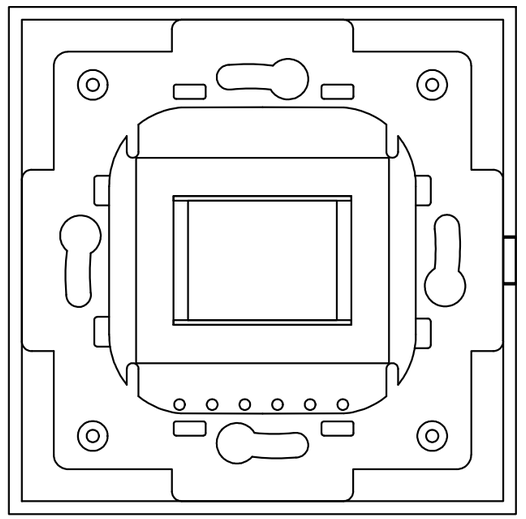

FONESTAR	Model	Description	Units	Scale
	DOT-60M	LOW IMPEDANCE MONO ATTENUATOR	mm	1:1