PUBLIC ADDRESS / SPEAKERS / SURFACE

SONORA-8TSUB-BK

SUBWOOFER LOUDSPEAKER WITH 100 V LINE TRANSFORMER AND LOW IMPEDANCE





- Deep bass, enhances the frequency content of music
- Excellent finish and elegant design
- Indoor or outdoor installation protected from rain.
- Quick and easy installation

+ Info:
https://fonestar.com/SONORA-8TSUB-BK

ESPECIALLY RECOMMENDED IN:


Hospitality


Education


Hotels


All sectors

DESCRIPTION

Surface mounted subwoofer loudspeaker. 8". 120/60/30/15 W RMS@100 V. 120 W RMS@8Ohm. IP-66 protection and salt fog. Adjustable fixing mount. Steel safety cable.

TECHNICAL CHARACTERISTICS

FEATURES	Sound reinforcement subwoofer speaker with 100 V line transformer and low impedance. Suitable for outdoor use protected from rain. Anti-corrosion materials.
POWER	180 W maximum, 120 W RMS
SPEAKERS	8" paper cone subwoofer with water-resistant treatment
RESPONSE	50-300 Hz (-10 dB)
IMPEDANCE	120 W RMS@100 V (83 Ohm) 60 W RMS@100 V/70 V (166 Ohm/81 Ohm) 30 W RMS@100 V/70 V (333 Ohm/163 Ohm) 15 W RMS@100 V/70 V (666 Ohm/326 Ohm) 7.5 W RMS@70 V (653 Ohm) Low Z: 8 Ohm
SENSITIVITY	90 dB @ 1 W/1 m (100 Hz)
MAXIMUM SOUND PRESSURE	110 dB @ max. W/1 m
PROTECTIONS	IP-66 IEC 60068-2-11 Environmental Test (Salt mist
MATERIAL	ABS (UV resistance) Aluminium mesh grille, with powder-coated finish Weather-resistant mount A2 stainless steel screws
SWITCH	W selector in high Z and low Z
CONNECTORS	Euroblock in and out for cable 0.25 - 2.5 mm² cross section Rubber cable glands for round cables with a diameter of 4–7 mm
TEMPERATURE RANGE	-10ºC ~ 60ºC
COLOUR	Black (RAL 9005)


+ Info:
https://fonestar.com/SONORA-8TSUB-BK

DIMENSIONS	Loudspeaker: 235 x 380 x 200 mm depth Mount wall plate: 102 x 165 mm Loudspeaker with mount: 305 mm depth
WEIGHT	7 kg
ACCESSORIES	Adjustable mounting bracket ± 60º in all directions. Steel safety cable

+ Info:
https://fonestar.com/SONORA-8TSUB-BK

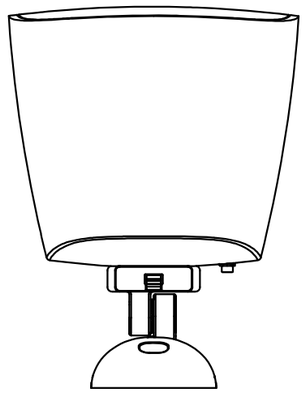

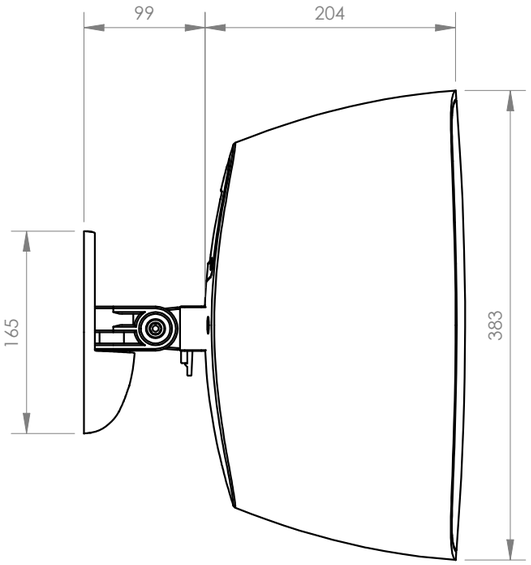

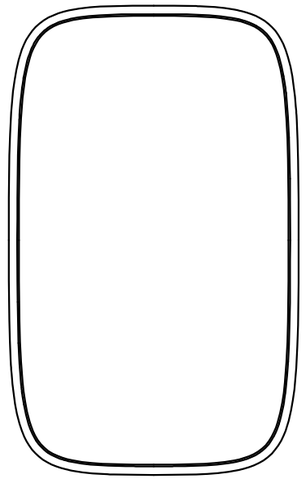

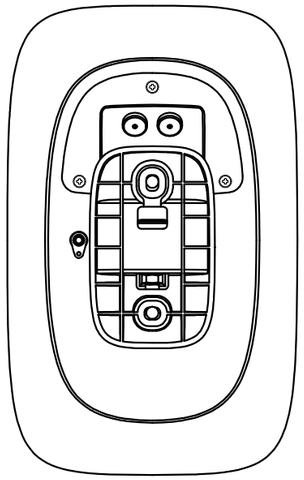

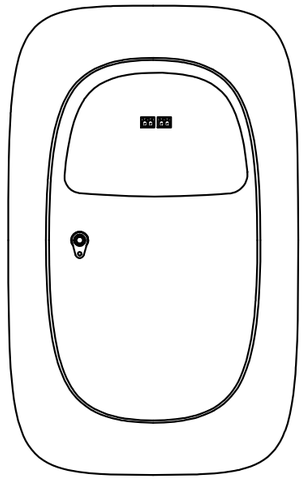

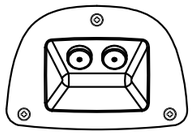

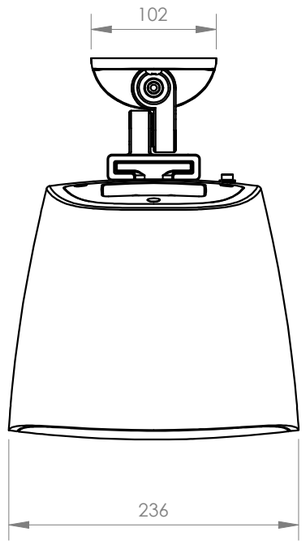

FONESTAR	Model SONORA-8TB+SONORA-8TN	Description 100 V LINE TRANSFORMER AND LOW IMPEDANCE SURFACE SPEAKER	Units mm	Scale 1:5